# Ciudad de Salinas

# Programa de Reparación de la Acera

# Manual

*Actualizado el 24 de Septiembre del 2025*

**50/50 Programa de Reparación de la Acera**

Gracias por su interés en la sustitución de la acera o bordillo y cuneta junto a su propiedad. El procedimiento para completar este trabajo son los siguientes. El programa de reparación de la acera pagara la mitad de una cuneta, acera o bordillo hasta un máximo de dos mil quinientos dólares ($2,500.00). Hay una cantidad limitada de dinero disponible para el programa y cada uno de los distritos del Consejo recibirá una parte igual. En el cuarto trimestre del año fiscal, fondos no utilizados se distribuirán en orden de llegada.

**Procedimiento:**

1. **Solicitar una evaluación**. El propietario puede hacer una petición para que la ciudad realice una evaluación de banqueta o bordillo y cuneta. Por favor, póngase en contacto con la División de Servicios Ambientales & Mantenimiento al (831) 758-7233 o baje la aplicación móvil **Salinas Connect**. La aplicación se puede encontrar en Google Play o el App Store. También puede visitar la página Web de la Ciudad de Salinas.
2. **Reunirse con un representante de la ciudad** para determinar el trabajo que será cubierto por el programa.
3. **Obtener ofertas para el trabajo de tres contratistas**, de su elección, que tienen licencia válida del Estado de California (A, B, C8, C-12), seguro de compensación para trabajadores, y una licencia de negocios valida de la Ciudad de Salinas. Una lista parcial de contratistas está disponible en la página de Internet de la Ciudad de Salinas.
4. **Revise con la ciudad las ofertas** para seleccionar el más bajo postor. La cantidad del reembolso se basa en la oferta responsable más baja.
5. **El dueño entra en un contrato con el contratista elegido** y una copia del contrato o acuerdo se da a la ciudad antes de que comience cualquier trabajo.
6. **El contratista y una representante de la ciudad se reúnen** para revisar el trabajo antes que comience.
7. **Evaluación de árboles.** Si un árbol de la ciudad ha causado daños en la acera, la ciudad determinara si el árbol necesita ser removido y reemplazo, sin costo para el dueño de la propiedad.
8. **El trabajo debe ser a las normas de la ciudad de Salinas** y debe ser inspeccionado y aprobado por el Inspector de la ciudad.
9. **El dueño de la propiedad tiene una forma de pago:**
   El dueño de la propiedad paga al contratista el 50% del costo de reparación y hace que la Ciudad pague al contratista el 50% restante hasta $2,500 por la porción de la Ciudad de los costos de reparación tras la verificación del pago por parte del dueño de la propiedad.

Otras consideraciones: Si el bordillo y la cuneta deben ser substituidos por el propietario, la ciudad va a reemplazar la relación de asfalto a la acera nueva sin costo para el propietario.

**Contratistas de Concreto Locales**

HEMI's Landscaping & Concrete
446 Boronda Road
Salinas, CA 93907
(831) 594-6182

Golz Contruction
101 Hunter Lane
Salinas, CA 93908
(831) 3204502

Don Chapin Company Inc.
560 Crazy Horse Canyon Road
Salinas, CA 93907
(831) 449-4273

Precision Estimating
(831) 737-9490
PrecisionEstimatingCCS@gmail.com

Alfredo's Concrete
690 Old Stage Road
Salinas, CA 93908
(831) 905-7205

Esta es una lista mantenida por la Ciudad de contratistas calificados para realizar reparaciones en la acera (Nota: La Ciudad no recomienda a ningún contratista específico en esta lista. Solo es para uso informativo). Otras fuentes informativas, como las páginas amarillas, pueden utilizarse para obtener un contratista calificado. Cualquier contratista que realice trabajos de reparación de aceras debe tener una licencia comercial de la Ciudad de Salinas y una licencia del Estado de California (Clase A o C-8).

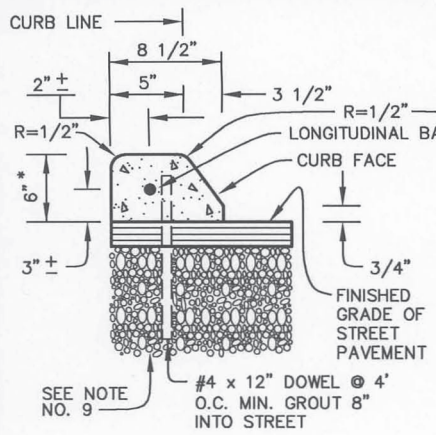


## TYPE A

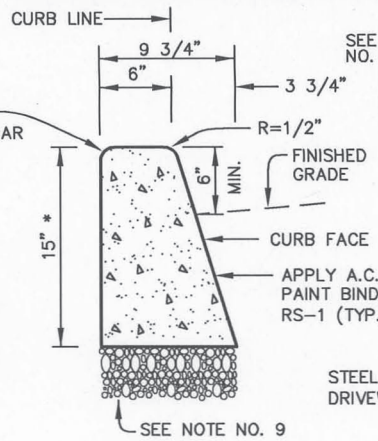


## TYPE B

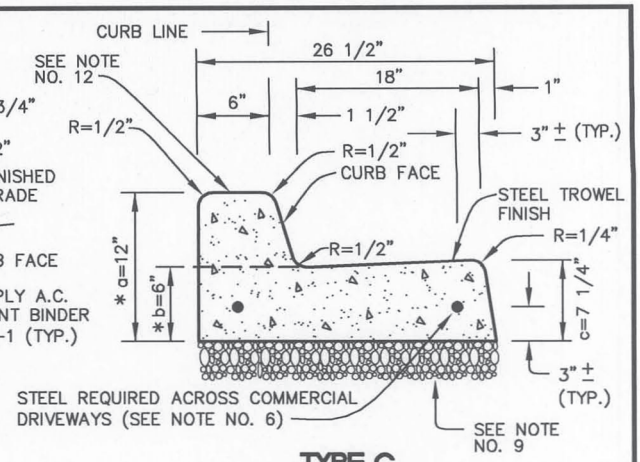


## TYPE C

INTEGRAL CURB AND GUTTER

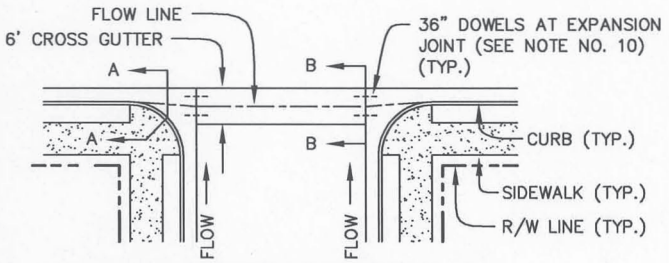


## TYPICAL CROSS GUTTER DETAIL

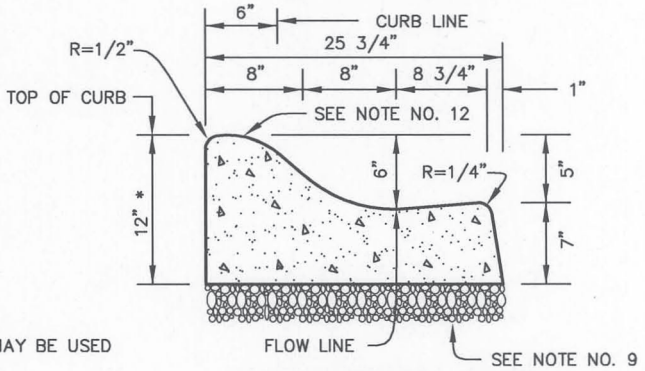


## STANDARD ROLL CURB

## GENERAL NOTES

* NOMINAL DIMENSION BACK-FORM MAY BE USED EXCEPT IN INDUSTRIAL AREAS

1. DRAWING NOT TO SCALE.
2. ALL WORK SHALL BE DONE IN ACCORDANCE WITH SECTION 73 OF THE CITY STANDARD SPECIFICATIONS.
3. EXPANSION JOINTS SHALL BE SLIP DOWELED AT CURB RETURNS (SEE CITY STANDARD PLAN NO. 2).
4. TOP AND FRONT OF ALL CURBS SHALL BE FINE BROOM FINISHED.
5. CURB RETURNS SHALL BE TYPE "C" EXCEPT ADJACENT TO CROSS GUTTERS, WHERE MODIFIED TYPE "C" CURB AND APRON SHALL BE USED.
6. CURB AND GUTTER AT COMMERCIAL DRIVEWAYS SHALL HAVE 2 #4 BARS INSTALLED FOR THE WIDTH OF THE DRIVEWAY (HEAVY DUTY TYPE "C" CURB AND GUTTER).
7. INSTALL 3/8" EXPANSION JOINTS AT 20' INTERVALS MAX. ON TYPE "C" CURB. PROVIDE WEAKENED PLANE JOINTS AT 10' INTERVALS WITH EXPANSION AT 60' INTERVALS ON EXTRUDED CURB (SEE CITY STANDARD PLAN NO. 2).
8. CLASS "3" CONCRETE PER CITY STANDARD SPECIFICATIONS SHALL BE USED.
9. 6" MINIMUM CLASS 2 A.B. OR HIGHER TYPE SHALL BE USED FOR BASE MATERIALS.
10. CROSS GUTTERS SHALL HAVE TWO #4 x 36" LONG STEEL DOWELS AT MID-DEPTH CENTERED AT EXPANSION JOINT. FOR SLIP DOWEL DETAIL SEE CITY STANDARD PLAN NO. 2.
11. AN ADHESIVE APPROVED BY THE CITY ENGINEER MAY BE USED IN LIEU OF DOWELS IN TYPE "A" EXTRUDED CURB FOR PLACEMENT ON EXISTING PAVEMENT. OMIT HORIZONTAL STEEL IN EXTRUDED CURB (EXCEPT ACROSS COMMERCIAL DRIVEWAYS).
12. CONTRACTOR SHALL STAMP TOP OF CURB WITH THE LETTERS "G" (GAS), "S" (SEWER), AND/OR "W" (WATER) TO IDENTIFY UTILITY SERVICE LOCATIONS.
13. WITHIN INDUSTRIAL AREAS SUBJECT TO HEAVY TRUCK TRAFFIC, THE CONCRETE THICKNESS SHALL BE a=14", b=8", AND c=9 1/4".

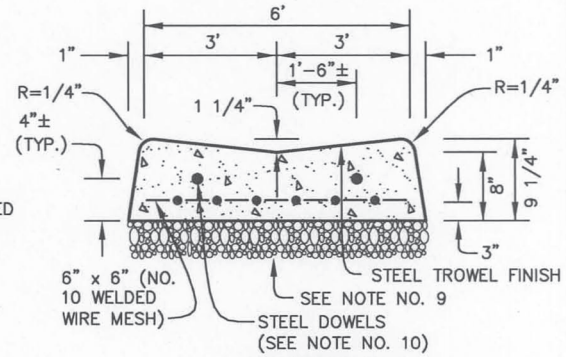


## SECTION B-B

CROSS GUTTER

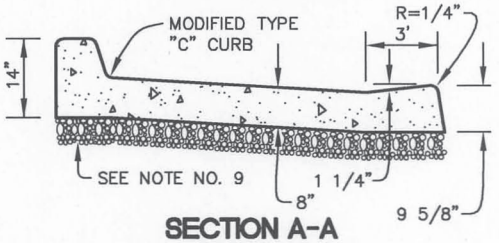


## SECTION A-A

CROSS GUTTER

**DEVELOPMENT & ENGINEERING SERVICES DEPARTMENT**

ENGINEERING SERVICES DIVISION — CITY OF SALINAS

TITLE: **CURBS AND GUTTERS**

**STANDARD PLAN**

**1**

DESIGNED BY: STAFF

CADD BY: STAFF

PROJECT MANAGER: FRANK A. AGUAYO, P.E.

DATE 10/21/2008

ROBERT C. RUSSELL, CITY ENGINEER
R.C.E. 42871, EXPIRES 3-31-2010

REGISTERED PROFESSIONAL ENGINEER ROBERT C. RUSSELL NO. 42871 EXP. 3-31-2010 CIVIL STATE OF CALIFORNIA

Copyright © 2008, City of Salinas, California

J:\p\City of Salinas Standard Specs-Plans_2008 Edition\Plans\Std01(2008)Russell.dwg

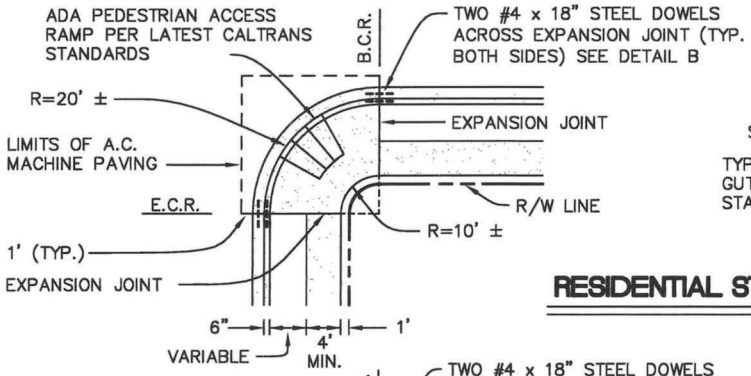


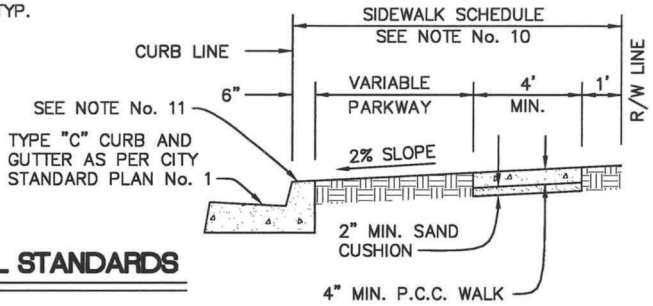


## RESIDENTIAL STANDARDS

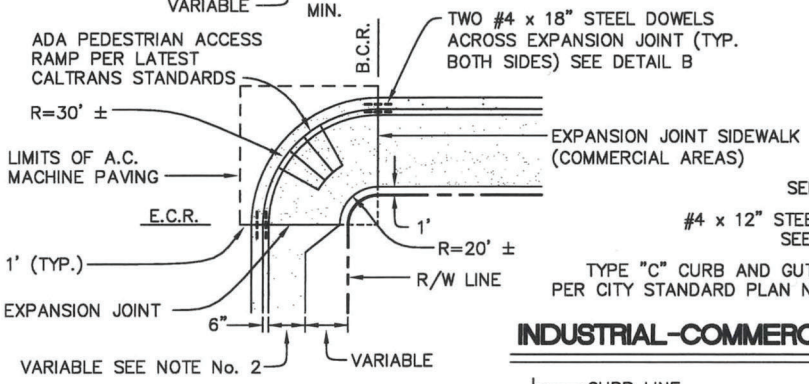


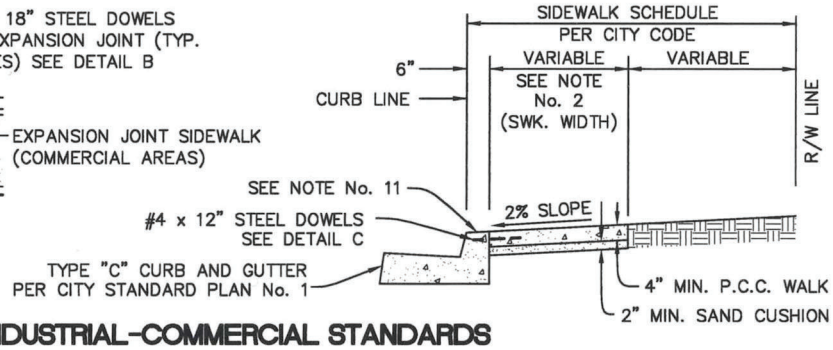


## INDUSTRIAL-COMMERCIAL STANDARDS

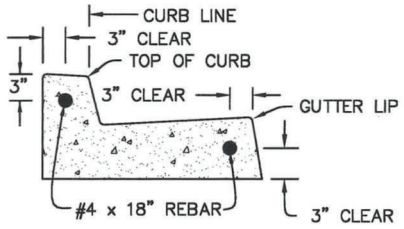


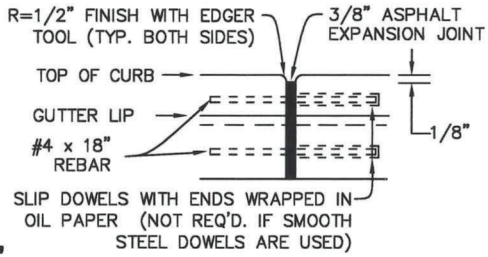


## DETAIL "B"

TYPICAL DOWEL DETAIL AT CURB RETURNS

## GENERAL NOTES

1. DRAWING NOT TO SCALE.
2. CONCRETE SIDEWALK SHALL BE 8.5' MINIMUM IN COMMERCIAL AREAS AND 5.5' MINIMUM FOR INDUSTRIAL AREAS. A 6' SIDEWALK CAN BE USED IN COMMERCIAL AREAS UPON APPROVAL OF THE CITY ENGINEER. ALL SIDEWALKS SHALL HAVE A MINIMUM 4' CLEAR PASSAGE, FREE OF OBSTRUCTIONS AND/OR HINDRANCES, AS OUTLINED IN TITLE 24 OF THE CALIFORNIA BUILDING CODE.
3. ALL SIDEWALKS SHALL BE ONE COURSE, CLASS "3" P.C.C. WITH A FINE BROOM FINISH.
4. ASPHALT EXPANSION JOINTS SHALL BE PLACED WITH MAXIMUM SPACING OF 60' AND WHEREVER SIDEWALK ADJOINS EXISTING BUILDING OR SIDEWALK. SCORE LINES SHALL BE PROVIDED FOR EVERY 16 TO 22 S.F. AT 4' INTERVALS AND PROPORTIONAL OR AS DIRECTED BY THE CITY ENGINEER.
5. ASPHALT EXPANSION JOINT SHALL BE COMPOSED OF ASPHALT, FIBER, AND MINERAL FILLER PREMOLDED INTO SHEETS WITH ASPHALT IMPREGNATED LINERS ON BOTH SIDES AND SHALL CONFORM WITH ASTM 1751 AND AASHTO M-33-48 SPECIFICATIONS.
6. REBAR SHALL BE INSTALLED PER DETAIL "B" AT B.C.R. AND E.C.R.
7. CONTRACTOR SHALL STAMP HIS/HER NAME, MONTH, AND YEAR OF CONSTRUCTION ON SIDEWALK, WITH A MINIMUM OF ONCE PER CONSTRUCTION AND ONCE PER EACH 500 S.F., MONTH AND YEAR MAY BE STAMPED IN NUMBERS.
8. ALL DIMENSIONS AS SHOWN UNLESS OTHERWISE SPECIFIED ON PLANS.
9. ADA PEDESTRIAN ACCESS RAMP SHALL BE PER LATEST CALTRANS STANDARDS.
10. SIDEWALKS LOCATED ADJACENT TO CURB, SHALL HAVE DOWELS BETWEEN CURB AND SIDEWALK REQUIRED AT 12' ON CENTER.
11. CONTRACTOR SHALL STAMP TOP OF CURB WITH THE LETTERS "G" (GAS), "S" (SEWER), AND/OR "W" (WATER) TO IDENTIFY UTILITY LOCATIONS.

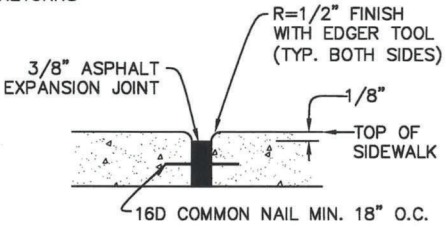


## DETAIL "A"

TYPICAL SIDEWALK EXPANSION JOINT

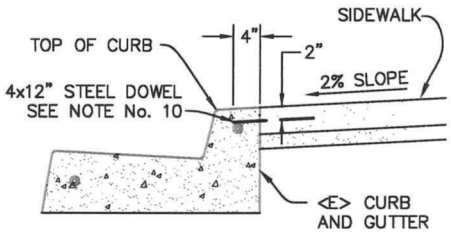


## DETAIL "C"

TYPICAL DOWEL DETAIL AT CURB/SIDEWALK

**PUBLIC WORKS DEPARTMENT**

ENGINEERING SERVICES DIVISION — CITY OF SALINAS

TITLE: **SIDEWALKS AND CURB RETURNS**

**STANDARD PLAN**

**2R**

DESIGNED BY: STAFF

CADD BY: STAFF

PROJECT MANAGER: EDA HERRERA P.E.

DATE 2/3/2017

FRANCISCO A. AGUAYO, CITY ENGINEER, R.C.E. 59378

REGISTERED PROFESSIONAL ENGINEER FRANCISCO A. AGUAYO NO. 59378 CIVIL STATE OF CALIFORNIA

J:\p\City of Salinas Standard Specs-Plans_2008 Edition\Plans\Std02R(2008)Russell-A.dwg

Copyright © 2008, City of Salinas, California

## RESIDENTIAL DRIVEWAY APPROACH

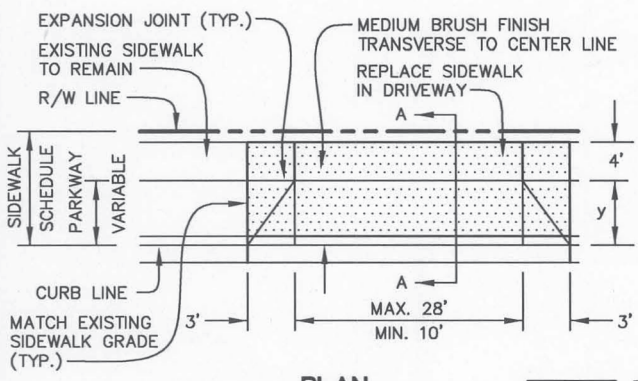


**PLAN**

## COMMERCIAL DRIVEWAY APPROACH

OPTION: 4' SIDEWALK MAY BE BEHIND PROPERTY LINE

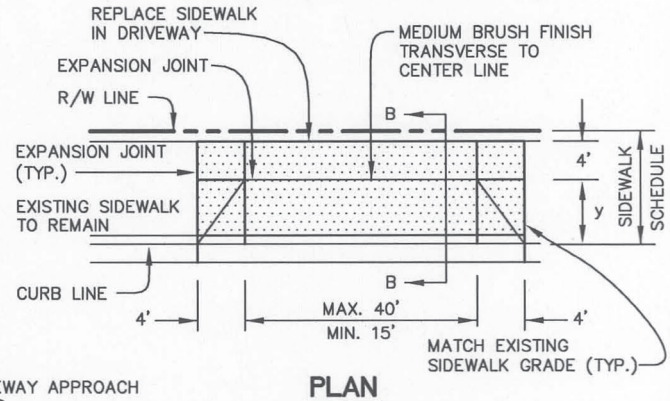


**PLAN**

DRIVEWAY APPROACH LIMITS

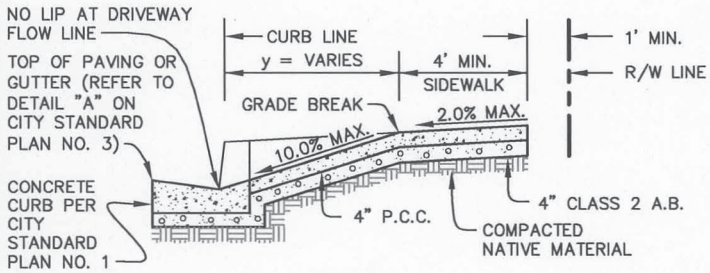


**SECTION A-A**

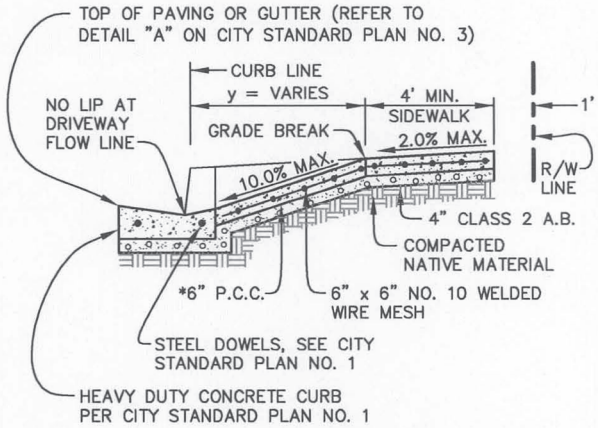


**SECTION B-B**

## GENERAL NOTES

1. DRAWING NOT TO SCALE.
2. ALL WORK SHALL BE CONSTRUCTED IN ACCORDANCE WITH THE LATEST ADOPTED CITY STANDARD SPECIFICATIONS.
3. THE AREA INCLUDED WITHIN THE "y" SLOPES SHALL BE MEDIUM BRUSH FINISH. THE BALANCE OF THE DRIVEWAY SHALL BE FINE BROOM FINISH TO MATCH THE ADJOINING SIDEWALK. SCORING LINES SHALL BE SPACED TO EVENLY DIVIDE THE AREA INTO BLOCKS OF NOT LESS THAN 3' AND NOT MORE THAN 4' OR MATCH EXISTING.
4. RESIDENTIAL DRIVEWAYS SHALL HAVE 4" MINIMUM CLASS 4 A.B. (OR BETTER). COMMERCIAL DRIVEWAYS SHALL HAVE 4" MINIMUM CLASS 2 A.B. AND 6" x 6" NO. 10 WELDED WIRE MESH PLACED AT MID-DEPTH OF CONCRETE.
5. CONCRETE SHALL BE CLASS "3" PER CITY STANDARD SPECIFICATIONS.
6. ON RESIDENTIAL DRIVEWAY CONSTRUCTION ONLY, CONTRACTOR MAY REMOVE VERTICAL CURB AND CONSTRUCT DRIVEWAY AGAINST REMAINING GUTTER. CITY ENGINEER APPROVED BONDING AGENT OR EPOXY SHALL BE APPLIED TO JOIN CONCRETE SURFACES.
7. CURB HEIGHT HIGHER THAN 6 1/2" SHALL BE APPROVED BY THE CITY ENGINEER PRIOR TO CONSTRUCTION.
8. * INCREASE CONCRETE THICKNESS BY 2" FOR DRIVEWAYS SERVING INDUSTRIAL SITES WHICH ARE SUBJECT TO HEAVY TRUCK TRAFFIC.
9. ALL DRIVEWAYS SHALL INCLUDE SIDEWALKS THAT ARE ADA COMPLIANT.

**DEVELOPMENT & ENGINEERING SERVICES DEPARTMENT**

ENGINEERING SERVICES DIVISION — CITY OF SALINAS

TITLE: **DRIVEWAY APPROACH**

**STANDARD PLAN**

**5**

DESIGNED BY: STAFF

CADD BY: STAFF

PROJECT MANAGER: FRANK A. AGUAYO, P.E.

DATE 10/21/2008

ROBERT C. RUSSELL, CITY ENGINEER
R.C.E. 42871, EXPIRES 3-31-2010

REGISTERED PROFESSIONAL ENGINEER ROBERT C. RUSSELL NO. 42871 EXP. 3-31-2010 CIVIL STATE OF CALIFORNIA

Copyright © 2008, City of Salinas, California

J:\p\City of Salinas Standard Specs-Plans_2008 Edition\Plans\Std05 A(2008)Russell.dwg

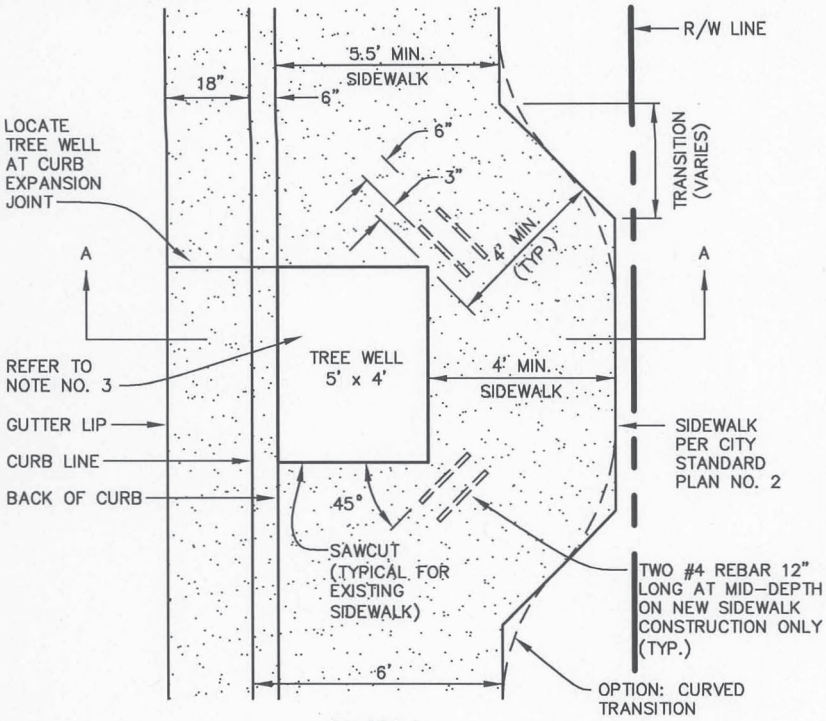


## PLAN A

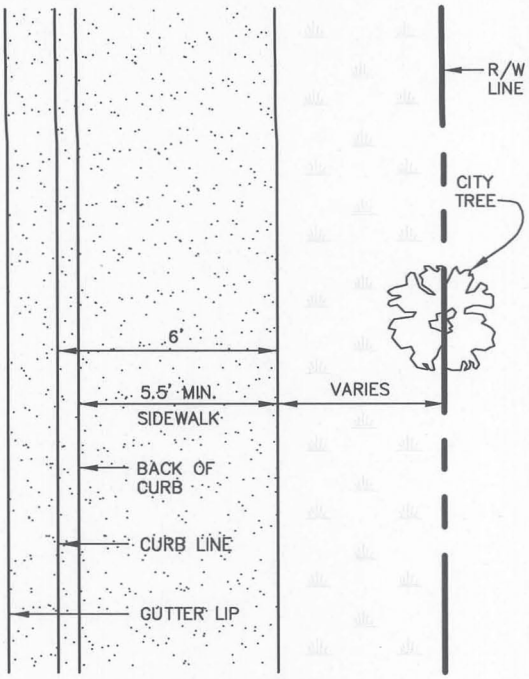


## ALTERNATE PLAN B

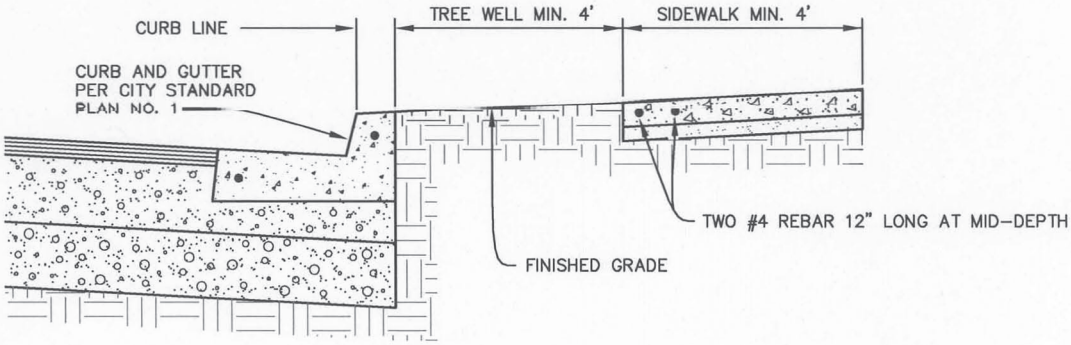


## SECTION A-A

## GENERAL NOTES

1. DRAWING NOT TO SCALE.
2. FOR STREET TREE PLANTING SEE CITY STANDARD PLAN NO. 11.
3. TREE WELL SHALL BE 5' x 4' MINIMUM RECTANGLE.
4. UNLESS OTHERWISE SPECIFIED IN THE SPECIFICATIONS AND/OR PLANS ALL PLACEMENT OF TREE WELL LOCATIONS SHALL BE AS FOLLOWS:
   - a. MINIMUM OF 40' FROM THE POINT OF INTERSECTION OF CURB LINE (P.I.).
   - b. MINIMUM OF 40' FROM THE TRAFFIC SIGNAL POLES.
   - c. MINIMUM OF 15' FROM COMMERCIAL DRIVEWAYS AND 10' FROM RESIDENTIAL DRIVEWAYS.
   - d. MINIMUM OF 25' FROM CATCH BASINS, SANITARY SEWER MAINS AND LATERALS, AND MANHOLES.
   - e. MINIMUM OF 5' FROM WATER METERS, WATER LINES, GAS LINES, STORM DRAIN LINES, AND UNDERGROUND ELECTRICAL LINES.
   - f. MINIMUM OF 10' FROM FIRE HYDRANTS.
   - g. MINIMUM OF 20' FROM STREET LIGHT POLES.
   - h. MINIMUM OF 10' FROM UTILITY POLES.
   - i. MINIMUM OF 40' TO 80' OF SPACING BETWEEN TREES (AVERAGE SPACING IS 60' APART) OR ONE TREE PER LOT. SPECIES OF TREE AND SPACING SHALL BE DETERMINED BY CITY ENGINEER.

**DEVELOPMENT & ENGINEERING SERVICES DEPARTMENT**

ENGINEERING SERVICES DIVISION — CITY OF SALINAS

| | | |
|---|---|---|
| TITLE: **TREE WELL** | | **STANDARD PLAN** |
| DESIGNED BY: STAFF | DATE 10/21/2008 | **10** |
| CADD BY: STAFF | ROBERT C. RUSSELL, CITY ENGINEER<br>R.C.E. 42871, EXPIRES 3-31-2010 | |
| PROJECT MANAGER: FRANK A. AGUAYO, P.E. | REGISTERED PROFESSIONAL ENGINEER ROBERT C. RUSSELL NO. 42871 EXP. 3-31-2010 CIVIL STATE OF CALIFORNIA | |

Copyright © 2008, City of Salinas, California